SOLIDWORKS ENTERPRISE PDM

TAKE CONTROL OF YOUR DATA TO ENHANCE COLLABORATION AND INNOVATION

ACCELERATE DESIGN

SolidWorks® Enterprise PDM manages and synchronizes design data across your product development team with a single, easily deployable solution tightly integrated with SolidWorks applications. You extend the reach of your 3DEXPERIENCE environment—locally or remotely, from engineering through manufacturing—to share information, collaborate on designs, and automatically protect design data with integrated tracking and version control.

SolidWorks EPDM takes care of your data

SolidWorks Enterprise Product Data Management (EPDM) centralizes the storage of all your engineering data and related files to give you these benefits:

- Secure, indexed repository for fast information retrieval
- Version control for both minor changes and major revisions to prevent data loss
- Integrated workflows that automate your design and approval process for more efficient review and release of final designs

With SolidWorks EPDM, you can dramatically reduce the time you spend searching for parts, assemblies, and drawings. Part of the SolidWorks product development solution covering design, simulation, sustainable design, technical communication, and data management, SolidWorks EPDM will help you drive design reuse and manage your overall **3D**EXPERIENCE product development environment.

Implemented in a fraction of the time required by other data management solutions, SolidWorks EPDM can scale from small workgroups to hundreds of designers located in offices anywhere in the world.

> "SolidWorks Enterprise PDM allows our designers to focus on innovation while the PDM system takes care of the structure of the project."
>
> — Vincent Clerc, R&D Mechatronics Manager, Aldebaran Robotics

Rapidly find data and control access

Focus your design organization on product innovation with tools to quickly and efficiently find, share, and reuse data.

- Search for data in multiple ways, using parameters such as document or file name, contained data, or custom properties like part number, description, and current workflow state (e.g., released or in process)
- Save searches for easy reuse, individually or across the enterprise
- Prevent designers from accidentally overwriting files through integrated version control
- Easily produce customized bills of materials (BOMs) for individual departments
- Manage, view, and print documents from more than 250 file types, including major CAD formats, Microsoft® Office, images, and animations
- Protect data from theft, damage, or misuse with secure login
- Always ensure manufacturing has the right version, avoiding costly mistakes

Implement and scale quickly

Realize an immediate return on your investment by launching SolidWorks EPDM in just days, then scale it as your organization grows in people, partners, and geography.

- Scale up to hundreds of users
- Get up and running within five (5) days with the optional Quick Start Program available from your local authorized SolidWorks reseller
- Quickly adapt SolidWorks EPDM to your design processes, team structure, and industry through custom configuration
- Create custom applications to meet specific business requirements through the SolidWorks EPDM comprehensive application programming interface (API)

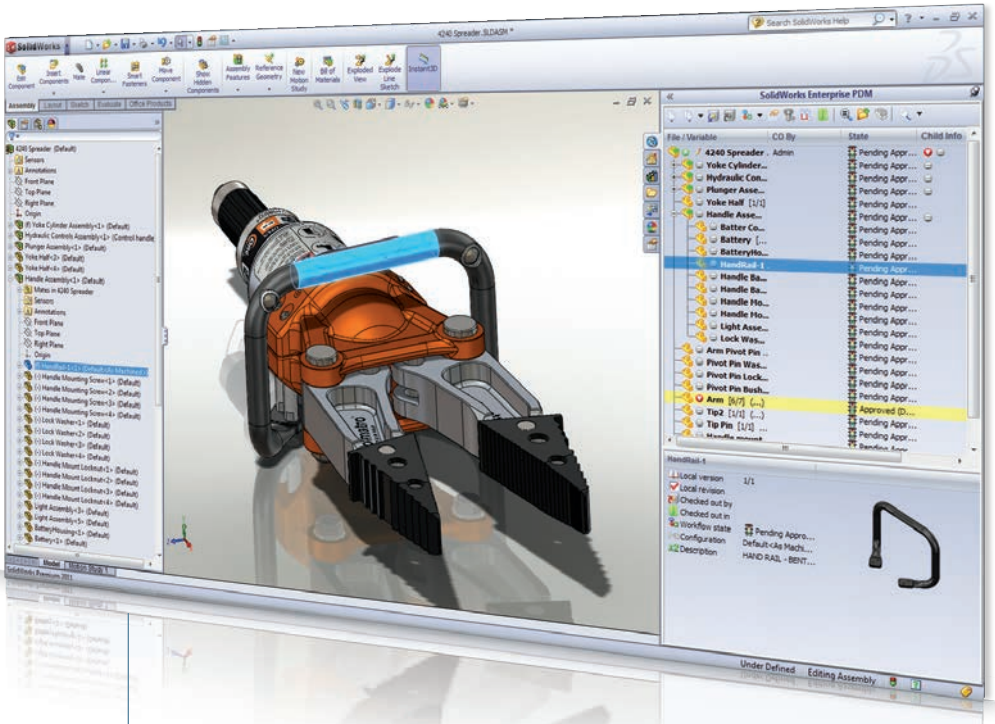

With the rich toolset embedded in the SolidWorks user interface, designers stay focused in one environment—with no need to switch interfaces for data management tasks.

Rescue Equipment | Holmatro Inc.

The integrated Windows Explorer search tool makes it easy to quickly find information and take action. Full integration of SolidWorks EPDM with Windows Explorer provides a familiar environment and unparalleled ease of use. The short learning curve also leads to higher productivity and a faster return on investment.

Get productive fast

Immediately get up to speed through a fully integrated bundle that includes database software, CAD connectors, replicated servers, and an API for customization.

- Engage new users quickly with the intuitive Windows® Explorer interface
- See "where used" and "contains" information for any design with one click
- Increase productivity with customized menus and personal preferences
- Find files faster and reduce desktop clutter using integrated Windows Explorer search and browse capabilities
- Instantly communicate with colleagues through information pop-ups

Streamline essential processes

SolidWorks EPDM uses an intuitive graphic interface to help you map workflows and minimize administrative work, while automated tracking of approvals and sign-offs maintains accuracy and accountability.

- Model company workflows and processes
- Increase productivity, quality, and accountability by automating workflows and approval processes
- Instantly access audit trails to meet internal and external reporting requirements, document quality control and standards compliance, and drive process improvement
- Automatically create files in common formats, such as PDF, at the end of an approved process

Collaborate without boundaries

Product development organizations can span continents and time zones.

SolidWorks EPDM creates a single collaborative community regardless of distance and location.

- Give distributed users quick access to designs, specifications, and documentation through Vault replication
- Enable staff and partners to contribute through remote-access portals
- Control access to specific engineering data and project information through secure access

Customizable workflows help your organization automate and control product development processes, streamlining approvals and improving audit controls.

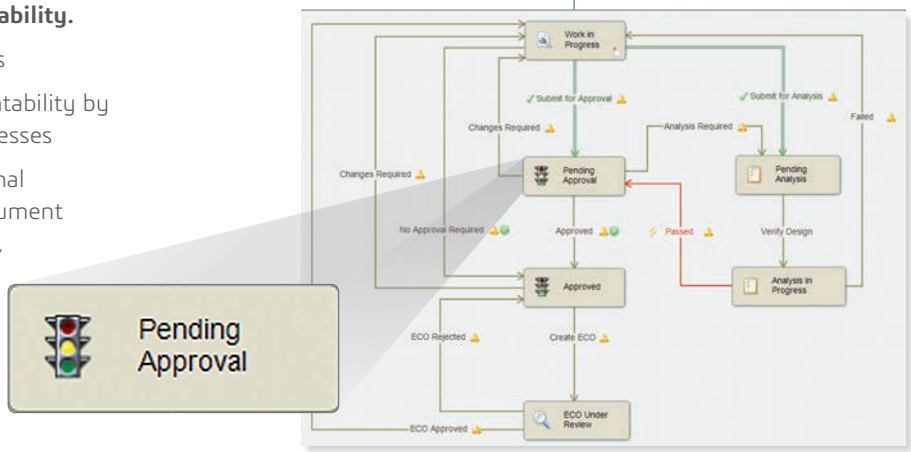

Access a full history of all document changes, previous versions, and revisions for rapid viewing, comparison, and compliance.

SOLIDWORKS PRODUCT DEVELOPMENT SOLUTION

SolidWorks software creates an intuitive **3D**EXPERIENCE development environment that maximizes the productivity of your design and engineering resources to create products better, faster, and more cost-effectively. See the full range of SolidWorks software for design, simulation, sustainable design, technical communication, and data management at **www.solidworks.com/products2014.**

LEARN MORE

To learn more about SolidWorks Enterprise PDM, visit www.solidworks.com/EPDM or contact your local authorized SolidWorks reseller.

SYSTEM REQUIREMENTS

SolidWorks Enterprise PDM CAD Editor

- Windows 7 (32- or 64-bit) or Windows 8 (64-bit only)
- 2 GB RAM (minimum)
- 5 GB disk space free (minimum)
- Video board (certified recommended)
- Intel® or AMD® processor
- DVD or broadband Internet connection
- Internet Explorer 8 or later

For additional details, visit www.solidworks.com/systemrequirements.

SolidWorks Contributor PDM

- Windows 7 or 8 (32- or 64-bit)
- 1 GB RAM (minimum)
- 2 GB disk space free (minimum)
- Video board (certified)
- Intel or AMD processor
- DVD or broadband Internet connection
- Internet Explorer 8 or later

SolidWorks EPDM Servers

Archive, Database, and Web Servers (optional)

Archive Server requirements:

- 1 GB RAM
- 10 GB hard drive
- Windows Server 2008 or higher

Database Server requirements:

- 4 GB RAM
- 10 GB hard drive
- Windows Server 2008 or higher
- Microsoft SQL Server 2005 SP2 or higher (included with purchase)

Web Server requirements:

- 1 GB RAM
- Windows Server 2008 or higher
- Internet Information Services (IIS)

Our **3D**EXPERIENCE Solutions powered by our brand applications serving 12 industries

Dassault Systèmes, the **3D**EXPERIENCE Company, provides business and people with virtual universes to imagine sustainable innovations. Its world-leading solutions transform the way products are designed, produced, and supported. Dassault Systèmes' collaborative solutions foster social innovation, expanding possibilities for the virtual world to improve the real world. The group brings value to over 150,000 customers of all sizes in all industries in more than 80 countries. For more information, visit www.3ds.com.

Visit us at 3DS.COM/SOLIDWORKS

3DEXPERIENCE

Americas
Dassault Systèmes
175 Wyman Street
Waltham, Massachusetts
02451-1223
USA

Europe/Middle East/Africa
Dassault Systèmes
10, rue Marcel Dassault
CS 40501
78946 Vélizy-Villacoublay Cedex
France

Asia-Pacific
Dassault Systèmes
Pier City Shibaura Bldg 10F
3-18-1 Kaigan, Minato-Ku
Tokyo 108-002
Japan

SolidWorks is a registered trademark of Dassault Systèmes SolidWorks Corporation in the U.S. and other countries. Other brand and product names are trademarks of their respective owners. © 2013 Dassault Systèmes. All rights reserved. MKEPDMDSENG0713